WATT Telescoping Valve

Rack & Pinion Options

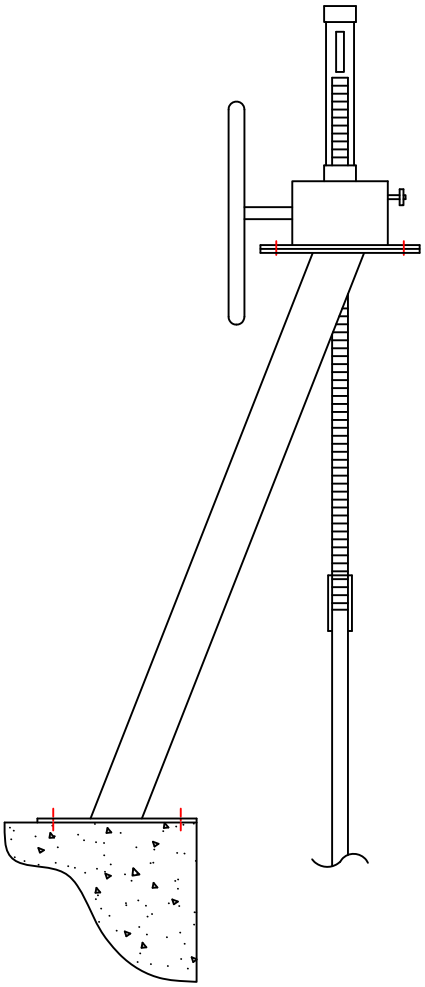

Offset floorstand

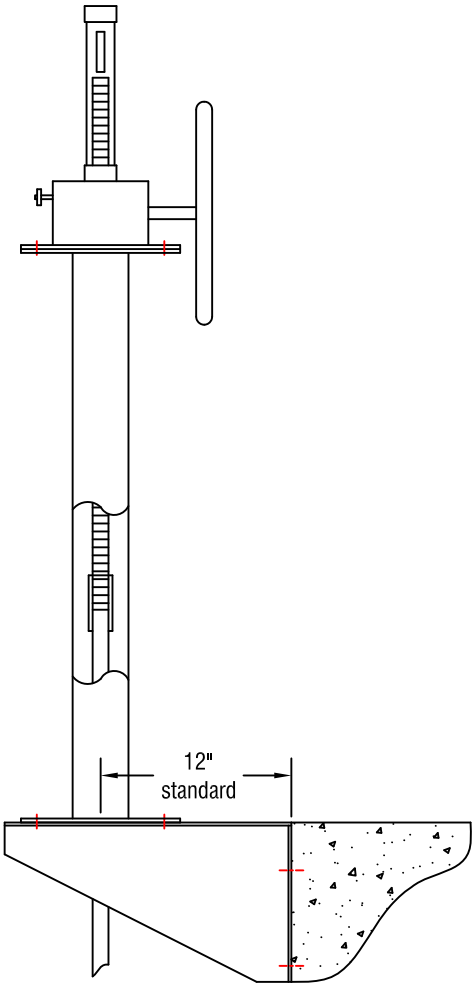

Wallbracket

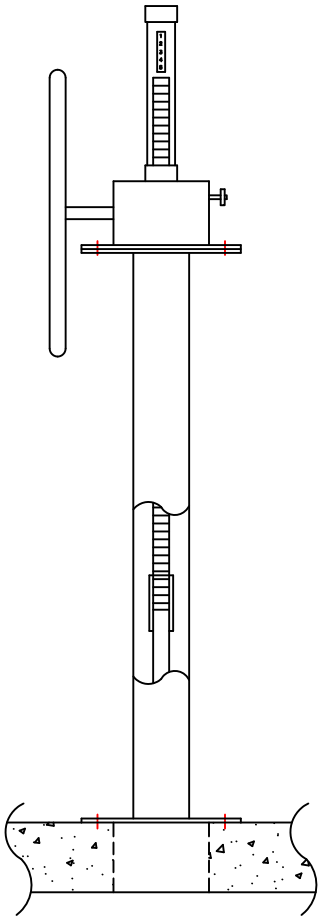

18" Diameter handwheel

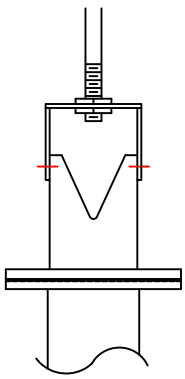

(2) Vee notches
180° apart

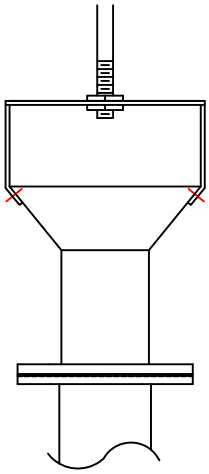

Funnel

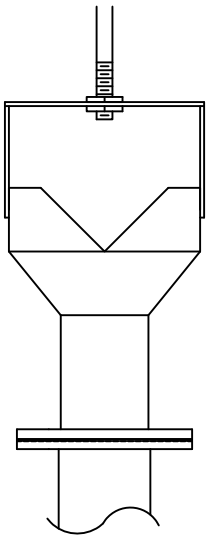

Funnel w/vee notches
180° apart

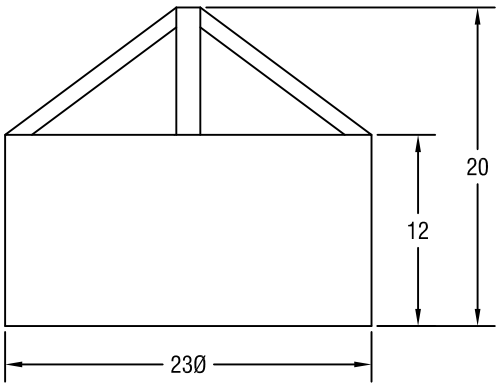

Scum baffle